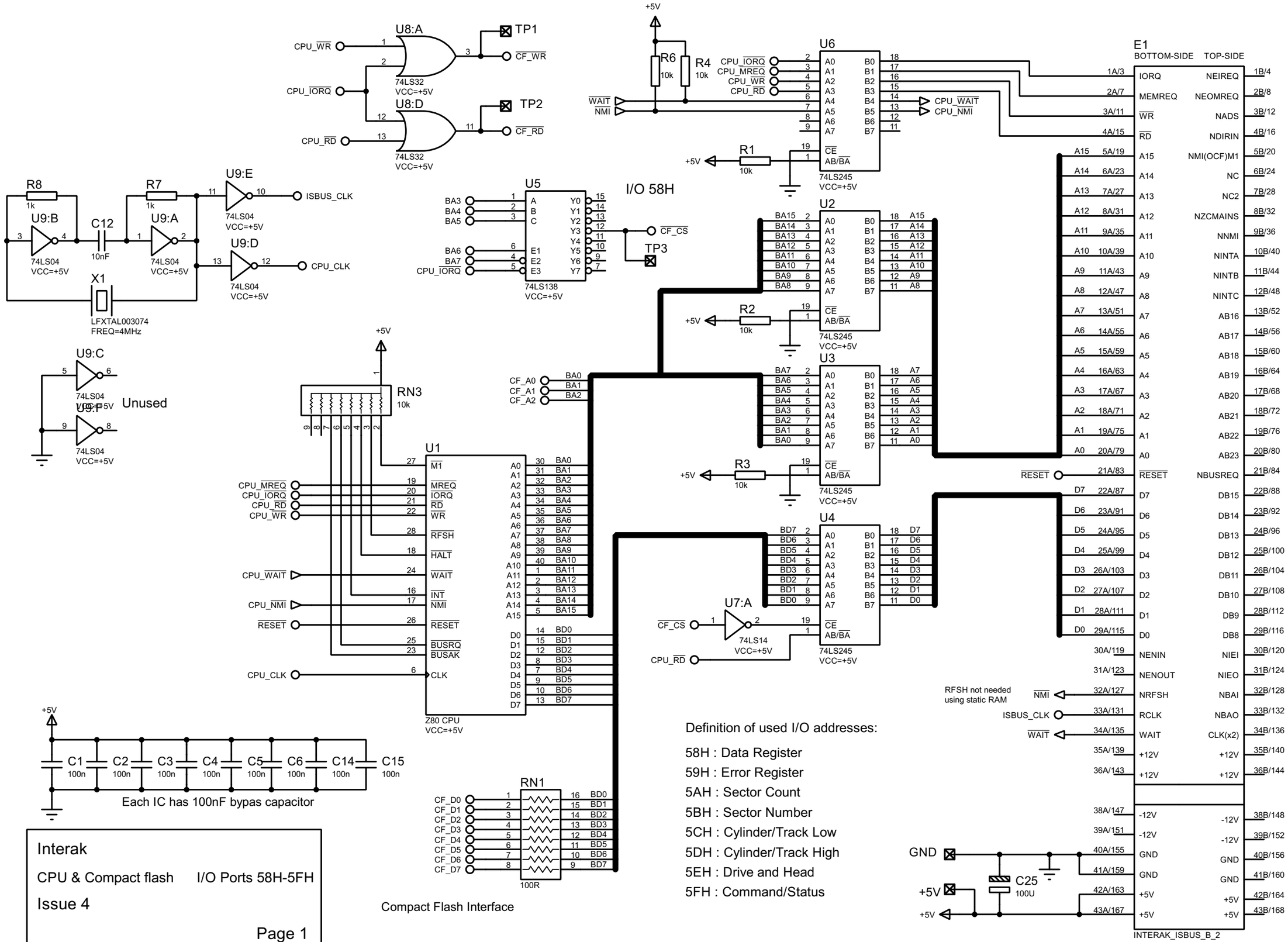
U8:A
U8:D
74LS32
VCC=+5V
CPU_WR
CPU_IORQ
CPU_RD
CF_WR
CF_RD
TP1
TP2
R6
10k
R4
10k
WAIT
NMI
U6
74LS245
VCC=+5V
CPU_IORQ
CPU_MREQ
CPU_WR
CPU_RD
CPU_WAIT
CPU_NMI
R1
10k
E1
BOTTOM-SIDE
TOP-SIDE
R8
1k
R7
1k
U9:B
U9:A
U9:E
U9:D
C12
10nF
74LS04
VCC=+5V
ISBUS_CLK
CPU_CLK
X1
LFXTAL003074
FREQ=4MHz
U5
74LS138
VCC=+5V
BA3
BA4
BA5
BA6
BA7
CPU_IORQ
CF_CS
TP3
I/O 58H
U2
U3
U4
R2
10k
R3
10k
U9:C
U9:F
Unused
RN3
10k
CF_A0
CF_A1
CF_A2
U1
Z80 CPU
VCC=+5V
CPU_MREQ
CPU_IORQ
CPU_RD
CPU_WR
CPU_WAIT
CPU_NMI
RESET
CPU_CLK
U7:A
74LS14
VCC=+5V
CF_CS
CPU_RD
RFSH not needed
using static RAM
ISBUS_CLK
WAIT
GND
C25
100U
INTERAK_ISBUS_B_2
C1
C2
C3
C4
C5
C6
C14
C15
100n
Each IC has 100nF bypas capacitor
RN1
100R
CF_D0
CF_D1
CF_D2
CF_D3
CF_D4
CF_D5
CF_D6
CF_D7
Compact Flash Interface
Definition of used I/O addresses:
58H : Data Register
59H : Error Register
5AH : Sector Count
5BH : Sector Number
5CH : Cylinder/Track Low
5DH : Cylinder/Track High
5EH : Drive and Head
5FH : Command/Status
Interak
CPU & Compact flash
I/O Ports 58H-5FH
Issue 4
Page 1

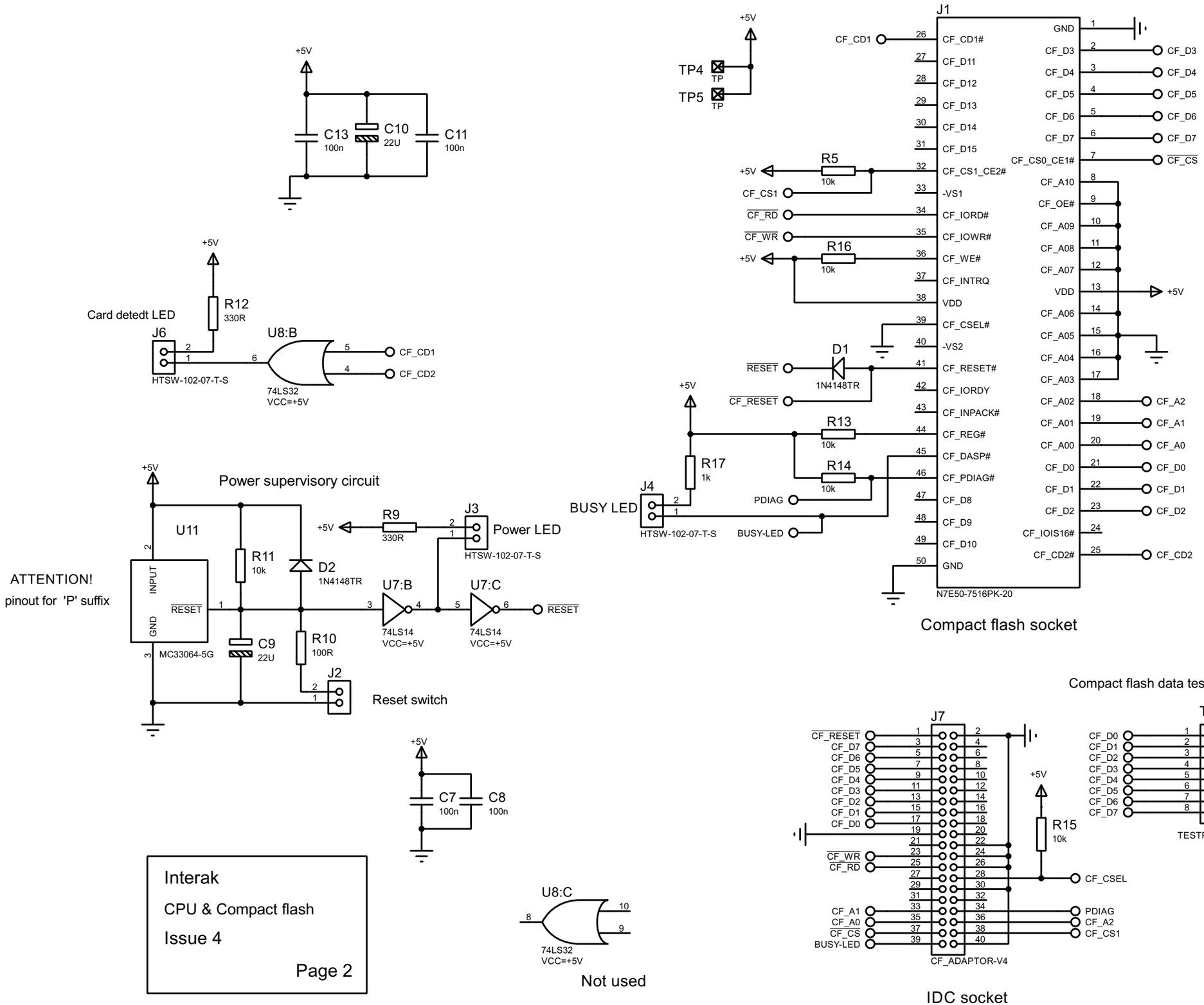
+5V
C13
100n
C10
22U
C11
100n
Card detedt LED
R12
330R
J6
HTSW-102-07-T-S
U8:B
74LS32
VCC=+5V
CF_CD1
CF_CD2
Power supervisory circuit
U11
ATTENTION!
pinout for 'P' suffix
INPUT
RESET
GND
MC33064-5G
R11
10k
D2
1N4148TR
C9
22U
R10
100R
J2
Reset switch
R9
330R
J3
Power LED
HTSW-102-07-T-S
U7:B
74LS14
VCC=+5V
U7:C
74LS14
VCC=+5V
RESET
C7
100n
C8
100n
U8:C
74LS32
VCC=+5V
Not used
Interak
CPU & Compact flash
Issue 4
Page 2
TP4
TP5
TP
J1
N7E50-7516PK-20
Compact flash socket
R5
10k
R16
10k
D1
1N4148TR
R13
10k
R14
10k
R17
1k
J4
BUSY LED
HTSW-102-07-T-S
PDIAG
BUSY-LED
CF_CD1
CF_D11
CF_D12
CF_D13
CF_D14
CF_D15
CF_CS1_CE2#
-VS1
CF_IORD#
CF_IOWR#
CF_WE#
CF_INTRQ
VDD
CF_CSEL#
-VS2
CF_RESET#
CF_IORDY
CF_INPACK#
CF_REG#
CF_DASP#
CF_PDIAG#
CF_D8
CF_D9
CF_D10
GND
CF_CS1
CF_RD
CF_WR
RESET
CF_RESET
CF_D3
CF_D4
CF_D5
CF_D6
CF_D7
CF_CS0_CE1#
CF_A10
CF_OE#
CF_A09
CF_A08
CF_A07
VDD
CF_A06
CF_A05
CF_A04
CF_A03
CF_A02
CF_A01
CF_A00
CF_D0
CF_D1
CF_D2
CF_IOIS16#
CF_CD2#
CF_CS
Compact flash data test points
TP-4
TESTPOINTS-8
J7
CF_ADAPTOR-V4
R15
10k
CF_CSEL
PDIAG
CF_A2
CF_CS1
CF_A1
CF_A0
CF_CS
BUSY-LED